EKO Instruments, Mashiki Solar Park, Japan

Bigger, better, bifacial

Words: Will Beuttell, Application Engineer, EKO USA

EKO Instruments are betting big on bifacial PV, delivering industry-leading accuracy with the most comprehensive package of bifacial and albedo measurement solutions available.

Bifacial photovoltaic (BPV) technology has been around for a long time, but only since 2012, when the first cost-effective bifacial panels entered the market, has it started to attract serious market consideration. It has been accelerating rapidly since 2019. Though there's a long way to go before BPV can claim to challenge the ubiquity of mono-facial PV, the key characteristics of BPV make a compelling case for its not-too-distant victory over traditional technologies.

A 2019 market research report published by Wood Mackenzie Power & Renewables (WoodMac) predicts that annual global bifacial module capacity will exceed 21 gigawatts by 2024 while the International Technology Roadmap for Photovoltaics (ITRPV), published by the German engineering association VDMA, forecasts that the growth in bifacial technologies will account for 80% of production by 2031.

However, despite such progress, many organisations and individuals across the solar energy industry are still unsure, often lacking confidence in the viability of the technology itself or the potential return on investment. Many across the solar industry also find it strange how fast bifacial swept the market.

So, what are the key characteristics of BPV?

Will Beuttell

What has changed to make it suddenly so popular? And how can a planner, engineer, researcher, or investor, determine whether or not to choose BPV over tried and tested mono-facial PV?

The answer is 'albedo', reflected solar energy; our ability to measure that reflected energy, and the ability of solar arrays to convert it into electricity. Bifacial PV modules harness solar energy from both the front and rear side of the PV panel; albedo, being the energy usually reflected from the ground or surrounding environment.

Existing BPV technology generates an average energy production gain of between 3% to 10% from the rear side. However, with accurate albedo field measurements, close attention to the installation and location conditions, a gain of 30% is achievable, delivering more power in the same amount of space.

The reasons behind the seemingly sudden popularity of BPV differ from region to region, but one unifying factor is the growing affordability of bifacial modules. One WoodMac study found that the production cost differential between bifacial and mono facial modules is now as low as half a US cent.

'Passivated Emitted Rear Contact' (PERC) designs, as well as a change from 'P-type' to 'N-type' semiconductors, are two of the critical improvements or changes that have allowed BPV to become financially viable. Now, PERC modules can achieve excellent additional photon capture within a module.

PERC cells yield higher efficiencies than previous designs but with increased 'Light Induced Degradation' (LID). As shown in illustration B. N-Type vs. P-Type (b), N-type cells offer improvements by reducing 'Potentially Induced Degradation' (PID) and LID. By switching to PERC and N-type cells, efficiencies can increase while simultaneously decreasing or removing critical degradation factors. Improvements in PERC and N-type production processes now allow a smoother transition from mono to bifacial module production for rapid scaling to meet this growing demand.

Falling production costs coupled with Increased durability, longevity, and the improving efficiency of cell structures mean lower initial outlays, faster ROI, and increased profitability—all important steps on the path to decarbonisation.

Just a few years ago, in 2019, Bifacial module prices were still 56% higher than mono-facial

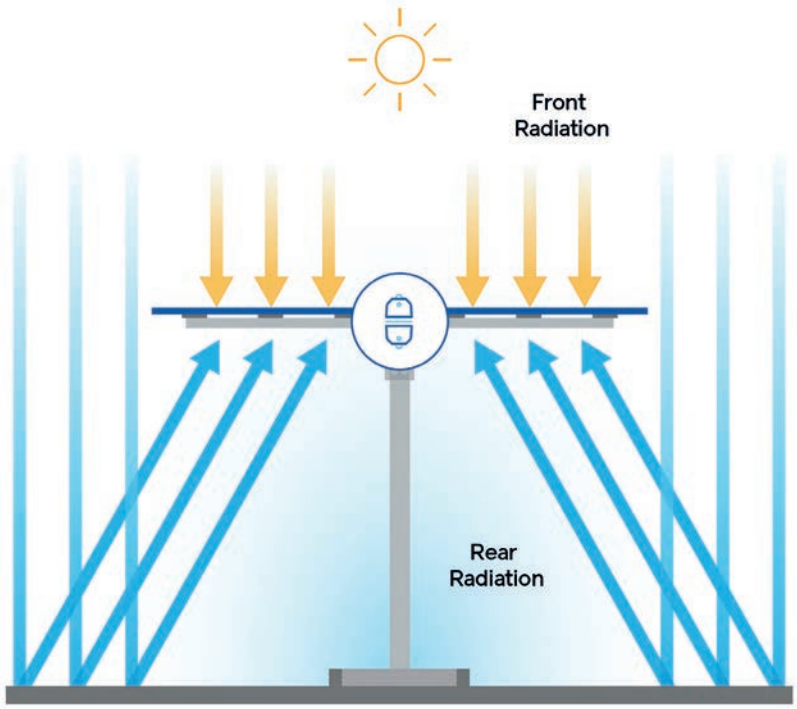

A. Albedo Solar Radiation Illustration

modules. Costs may be falling, but the choice between mono and bifacial still isn't clear cut in every situation. That's why accurate field measurements are crucial; from site research, through design, construction, ongoing management, monitoring and maintenance, accurate data is key to decision making at every stage.

EKO Instruments is unique in the PV industry as the only company offering a complete product line of research-grade and industrial equipment. Researchers can source most if not all of the sensors they need to study indoor bifacial PV module performance and long-term outdoor performance from one provider. Each end of this research spectrum represents critical input data for predicting module performance over its lifetime.

Modelling of PV performance has dramatically improved over the past decade; however, BPV technology cannot simply be assessed in the same way as mono-facial modules. The reflectance of radiation from the sky and ground onto the rear side of BPV modules is quite complex. Many presuppositions, even those based on accurate and reliable measurements of direct radiation for a given location, will almost certainly lead to miscalculation. Unrealised potential, even outright failure, is possible if simple transposition or incorrect relative assumptions are made.

As part of the initial research phase for a bifacial project, it is necessary to understand the performance potential of different bifacial modules. Besides the other semiconducting materials used in the industry, different technologies are being explored with various backside materials and constructions. Heterojunction Technology (HJT) is another technology that increases module efficiency. HJT cells combine crystalline silicon with amorphous silicon to increase power over a wider range of spectral conditions. Each design option and material should be analysed and performance metrics calculated.

Photovoltaic performance is dependent on specific ranges of spectral irradiance. For indoor testing, EKO spectroradiometers such as the MS-711 provide accurate irradiance measurement data within a spectral range of 300nm to 1100nm (UV-Visible-NIR). Spectral measurements are critical in studying new materials and manufacturing methods as well as validating the technology in the field. Having spectral measurements reduces uncertainty and questions of how much solar energy could be converted.

Made in Japan, designed for accuracy, and built for durability, spectroradiometers like the MS-711, deployed in an albedo configuration, can record National Institute of Standards and Technology (NIST) traceable and ASTM G138 compliant measurements of downwelling and upwelling irradiance. By measuring both the incoming front and rear spectral irradiance, the user can perfectly understand their module performance across changing seasons and in all atmospheric regimes. While spectroradiometers are ideal, they can be too expensive for certain applications. High quality, spectrally flat pyranometers, like our class and industry-leading S-Series, offer an alternative. With the fast-response and

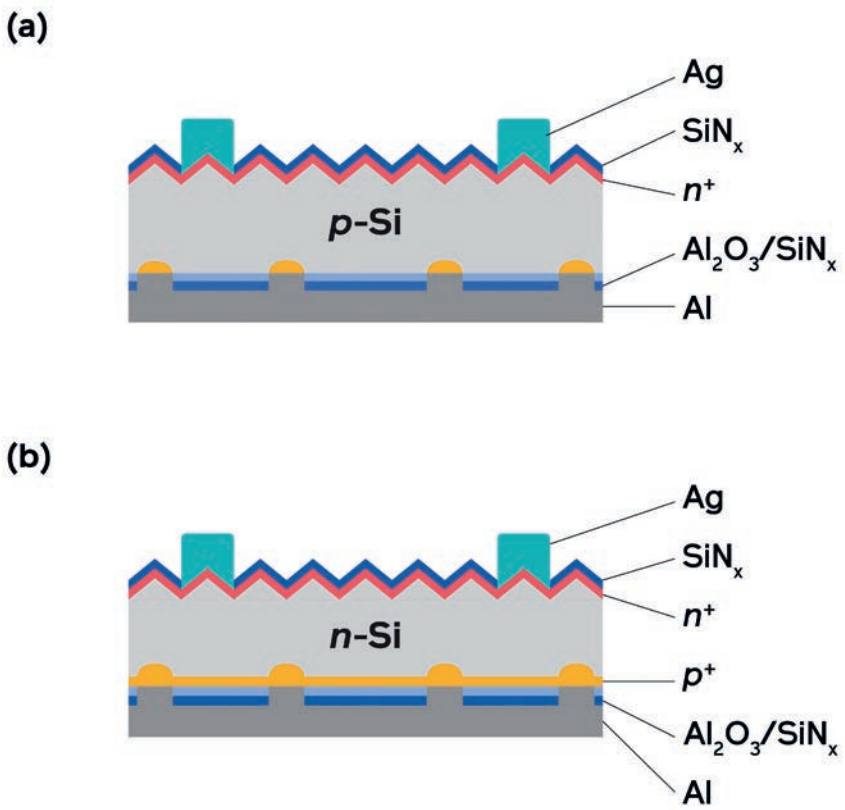

B. N-Type vs P-Type

spectrally-flat Class A MS-80S, for example, users can compare the relative differences of broadband albedo.

As mentioned earlier, BPV technology takes advantage of the surface spectral albedo, but albedo can vary dramatically from location to location; though it can broadly be categorised into three levels: low to high based on the surface. Vegetation generally has a low albedo, desert and soil, medium, while snow has high potential albedo. These factors can alter bifacial gains by a factor of 2; therefore, an accurate understanding of the local albedo conditions cannot be underestimated as part of the overall calculation and decision-making process.

For years, performance monitoring of PV sites required continuous measurements of the solar broadband irradiance; instruments were deployed in Global Horizontal Irradiance (GHI) and Plane of Array (POA) irradiance orientations. Now the added parameter of upward or reflected irradiance (RI) must be monitored. While spectral measurements are superior, broadband thermopile measurements are the industry standard for measuring irradiance in any orientation. As mentioned previously, EKO S-Series pyranometers can be mounted in a traditional albedo measurement configuration, one sensor measuring the downward irradiance and another measuring

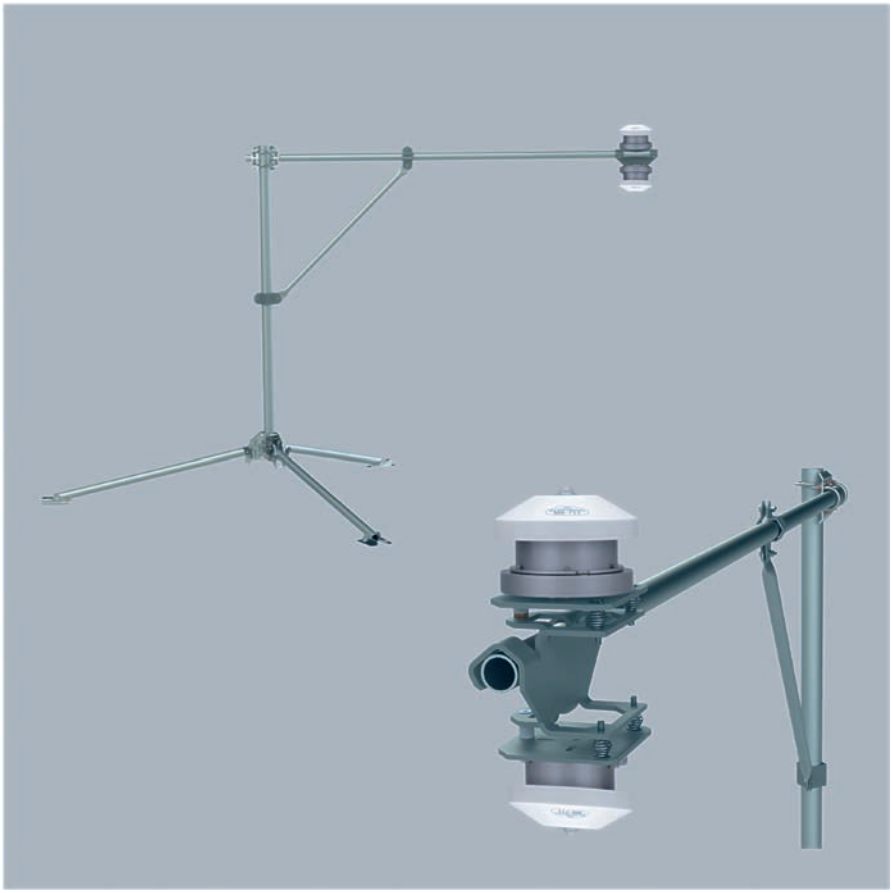

MS-711 Albedo Configuration Example

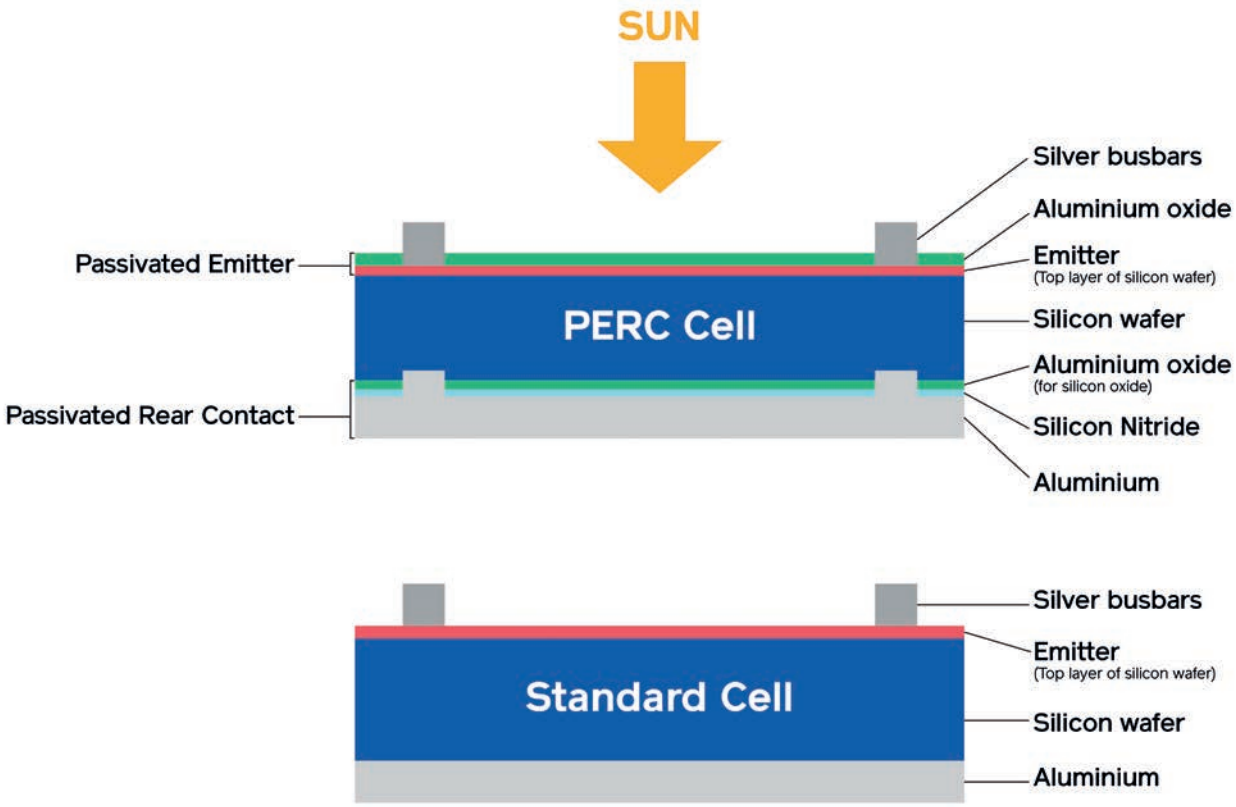

C. PERC Cell

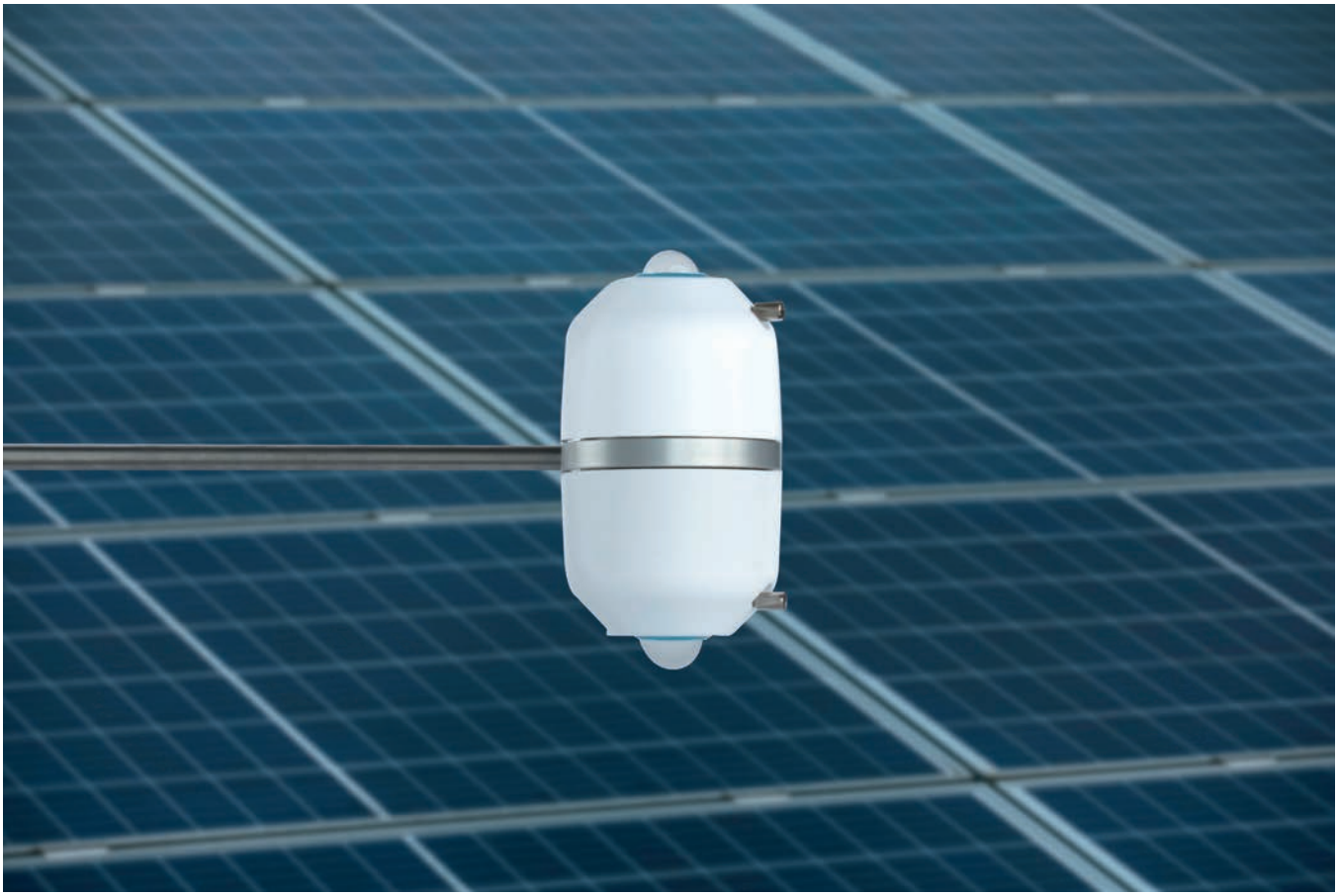

MS-80S Albedo Configuration

upward irradiance. Both levelled horizontally with the surface.

EKO Albedometers are based on a modular design, comprising two MS or S-Series pyranometers combined with our 'Albedo kit', plus glare screen. They are also able to integrate the optional MV-01 Heater & Ventilator. Compatible with all S-Series pyranometers, the albedo kit allows users to create their own configuration of sensors.

Each S-Series pyranometer also includes our unique 4-channel analog and digital interface, providing compatibility with 99% of data loggers and SCADA systems, Level A EMI/EMC electronic surge filtering, a 5-year warranty, a suite of internal temperature, humidity, tilt and roll angle sensors, and ISO 17025 accredited calibration; ensuring optimal performance with reduced maintenance.

ML-02 Albedo Configuration

Alternatively, the compact, low-cost, high-quality ISO9060:2018 non-spectrally flat Class C ML-02 Silicon albedometer is an optimal solution for measuring the irradiance distribution at different points of a PV array.

In summary, many challenges still face the solar energy market. Whether a site chooses to use bifacial or traditional PV, resource assessment and power performance monitoring are still necessary for ensuring the highest financial return. These challenges should not be considered barriers to adoption but instead as opportunities to fill in the knowledge gaps and to push the technology further. Data will empower our future decisions. With much on the line financially, now and in the future, high-quality and reliable measurements have never been of greater significance.

EKO measuring solutions can be the key to successful bifacial, data-driven decision making, helping our industry to grow through greater efficiency, higher yield, and more rapid ROI.

www.eko-eu.com